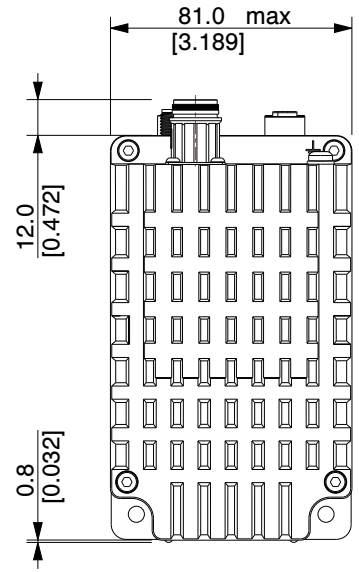

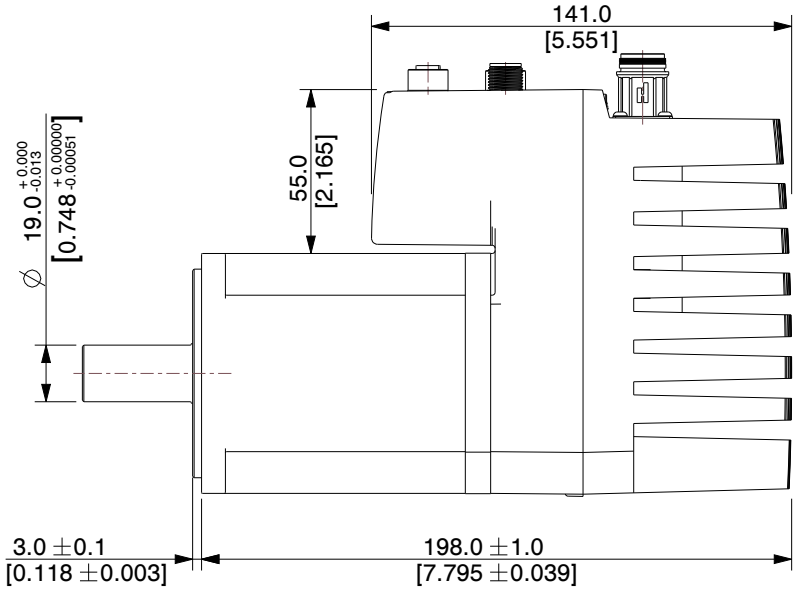

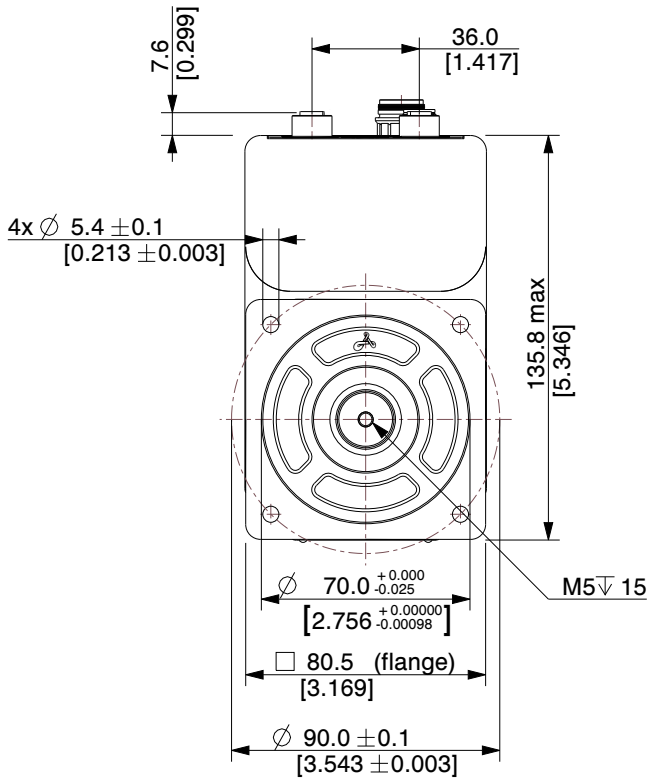

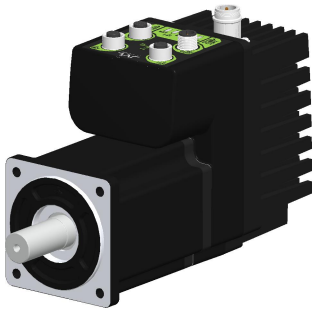

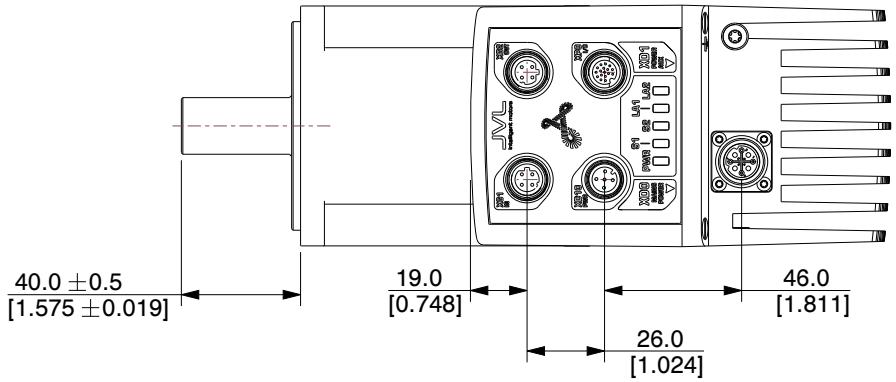

NOTES:
1. Encoder Type: Absolute multiturn 4096 Rev. Single 8192 CPR

JVL A/S Bregnerødvej 127 DK-3460 Birkerød Denmark	JVL www.jvl.dk
PART NUMBER:	**MAC1004M2-GAAREP2**
PART DESCRIPTION:	**Integrated Stepper Motor**
A4	SCALE: NTS UNIT: MM [Inch]

Unless specifically stated otherwise, this drawing is the property of JVL A/S and no feature embodied herein may be disclosed except as previously authorized